High frequency Circuits:
(Analysis and Design)

طراحی و تحلیل
مدارهای فرکانس بالا

دکتر سیروس طوفان

S_toofan@iust.ac.ir

مقدمه: چند سیگنال مرسوم

- سیگنالهای DC: فرکانس این سیگنالها تقریباً برابر صفر است و بیشتر به عنوان منبع انرژی در دستگاههای مختلف استفاده می شوند.
- سیگنالهای صوتی: این سیگنالها در محدوده فرکانسی ۲۰ هرتز تا ۲۰ کیلو هرتز قرار دارند که محدوده گویش و شنوایی انسان را در بر میگیرد.
- امواج اولتراسونیک یا ماورای صوت: این امواج در محدوده فرکانسی ۲۰ کیلو هرتز تا ۲ مگا هرتز قرار دارند که بیشتر در دستگاههای کنترل از راه دور استفاده می شوند.
- سیگنال تصویر یا ویدئو: این سگنالها در محدوده فرکانسی ۵۰ هرتز تا ۵ مگا هرتز قرار دارند.

مقدمه: طبقه بندی فرکانس ها بر اساس طول موج

معمولاً باندهای فرکانسی بر اساس طول موج آنها به صورت زیر دسته بندی میشوند. ($\lambda = 10x$)

- فرکانسهای رادیویی کم (Low Frequency) یا طول موج بلند (Long Wave): این فرکانسها در محدوده ۳۰ کیلو هرتز تا ۳۰۰ کیلو هرتز قرار دارد. که در گیرنده های قدیمی مورد استفاده قرار می گرفت. (کاربری: ناوبری دریایی و خیلی کم هم در ناوبری هوایی)
- فرکانسهای رادیویی متوسط (Medium Wave): این فرکانسها در محدوده ۳۰۰کیلو هرتز تا ۳ مگا هرتز قرار دارد و باند موج متوسط را پوشش می دهد. (کاربری: رادیو AM که در روی سطح زمین و با توان خیلی بالا و با یک آنتن در حد ۱۰۰متر پخش میشود، مخابرات دریایی)
- فرکانسهای رادیویی بالا HF: این فرکانسها در محدوده ۳مگا تا ۳۰ مگا هرتز قرار دارد معمولاً موج کوتاه رادیویی را تشکیل می دهند.(کاربری: مخابرات دریایی، مخابرات هوایی و رادیو راه دور با استفاده از لایه یونسفر یا همان رادیو SW که به خاطر تغییر وضعیت لایه یونسفر پایدار نیست)
- فرکانسهای رادیویی خیلی بالا VHF: این فرکانسها در محدوده فرکانسی ۳۰ تا ۳۰۰ مگاهرتز قرار دارد و فرکانسهای رادیویی آماتوری و کانالهای تلویزیونی را تشکیل می دهد. (کاربری:رادیو FM معمولی یا استریو برای فاصله کوتاه، مخابرات نظامی، رادیو آماتور و برنامه های تلویزیونی)

مقدمه: طبقه بندی فرکانس ها بر اساس طول موج

- فرکانسهای رادیویی خیلی خیلی زیاد (Ultra HF): این فرکانسها در محدوده ۳۰۰ مگا هرتز تا ۳گیگا هرتز قرار دارد. (کاربری: برنامه های تلویزیونی UHF، موبایل، بلوتوث، Wi-Fi، GPS، ISM (Industrial- Scientific- Medical))
- فرکانسهای رادیویی فوق العاده زیاد (Super HF): محدوده فرکانسی این باند در حد فاصل ۳ گیگا تا ۳۰ گیگا هرتز قرار دارد.(کاربری: مخابرات ماهواره و ارتباط بین شهری)
- فرکانسهای رادیویی بی نهایت زیاد (Extra HF) : این فرکانسها در محدوده ۳۰ گیگا تا ۳۰۰ گیگا هرتز قرار دارد.(کابری: مخابرات ماهواره ای، ارتباط بین ماهواره ها و اسکنرهای فرودگاهی)
- فرکانسهای SHF و EHF معمولاً باند میکروویو را تشکیل می دهند.
- امواج نورانی: فرکانسهای بیشتر از ۱۰۰۰ گیگا هرتز از محدوده امواج رادیویی خارج شده و طیف امواج نورانی مرئی و غیر مرئی را تشکیل می دهد. بیشترین فرکانس را اشعه کیهانی دارد در محدوده پنج ضرب در ده به توان بیست هرتز تا هشت ضرب در ده به توان بیست و یک هرتز قرار دارند.

Introduction: Radio spectrum or Frequency range chart

Frequency	Wavelength	Designation	Abbreviation
3–30 Hz	10^5–10^4 km	Extremely low frequency	ELF
30–300 Hz	10^4–10^3 km	Super low frequency	SLF
300–3000 Hz	10^3–100 km	Ultra low frequency	ULF
3–30 kHz	100–10 km	Very low frequency	VLF
30–300 kHz	10–1 km	Low frequency	LF
300 kHz – 3 MHz	1km – 100 m	Medium frequency	MF
3–30 MHz	100–10 m	High frequency	HF
30–300 MHz	10–1 m	Very high frequency	VHF
300 MHz – 3 GHz	1 m – 10 cm	Ultra high frequency	UHF
3–30 GHz	10–1 cm	Super high frequency	SHF
30–300 GHz	1 cm – 1 mm	Extremely high frequency	EHF
300 GHz – 3000 GHz	1 mm – 0.1 mm	Tremendously high frequency	THF

با افزایش فرکانس هزینه ساخت، توان مصرفی، پهنای باند افزایش و طول آنتن و مسافت ارسالی کاهش می یابند.
برای مشاهده فرکانس های تخصیص یافته به کاربردهای مختلف از عبارت های کلیدی زیر استفاده کنید.

- Frequency Allocation Chart -Table of Frequency Allocation

Introduction: Standard Radar Frequency Letter-Band Nomenclature

http://www.radioing.com/eengineer/bands.html

Standard Radar Frequency Letter-Band (IEEE Standard 521-2002; The next update is estimated for 2019)		
Band Designator	Frequency (GHz)	Wavelength (centimeters)
HF	0.003 to 0.030	10000 to 1000
VHF	0.030 to 0.300	1000 to 100
UHF	0.300 to 1	100 to 30.0
L band	1 to 2	30.0 to 15.0
S band	2 to 4	15 to 7.5
C band	4 to 8	7.5 to 3.8
X band	8 to 12	3.8 to 2.5
Ku band	12 to 18	2.5 to 1.7
K band	18 to 27	1.7 to 1.1
Ka band	27 to 40	1.1 to 0.75
V band	40 to 75	0.75 to 0.40
W band	75 to 110	0.40 to 0.27
mm	110 to 300	0.27 to 0.10

Introduction: Electromagnetic Spectrums

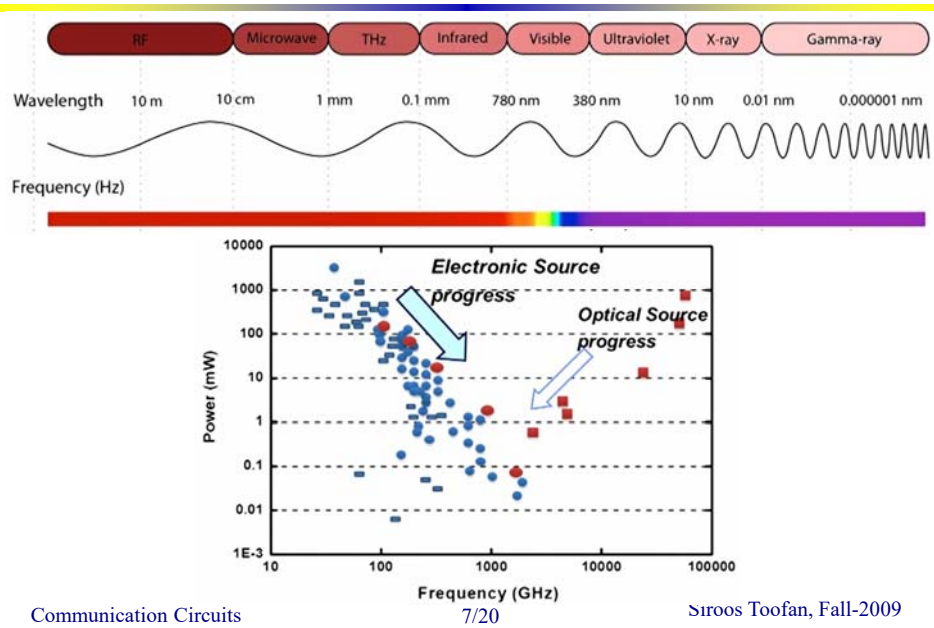

Introduction: bluetooth frequency allocations

Bluetooth operates at 2.4 GHz ISM (Industrial, Scientific, and Medical) band. Following table defines bluetooth frequencies used across the world. As mentioned bandwidth is sufficient to define 79 channels (in US, Europe and other countries) having 1 MHz bandwidth in each channel. Japan, Spain and France uses 23 bluetooth channels.

Region	Frequency Range	RF Channels
US, Europe and rest of the World	2.4 to 2.4835 GHz	f=2402 + n, MHz (n = 0 to 78)
Japan	2.471 to 2.497 GHz	f = 2473 + n, MHz (n = 0 to 22)
Spain	2.445 to 2.475 GHz	f = 2449 + n, MHz (n = 0 to 22)
France	2.4465 to 2.4835 GHz	f = 2454 + n , MHz (n = 0 to 22)

Introduction: ISM band

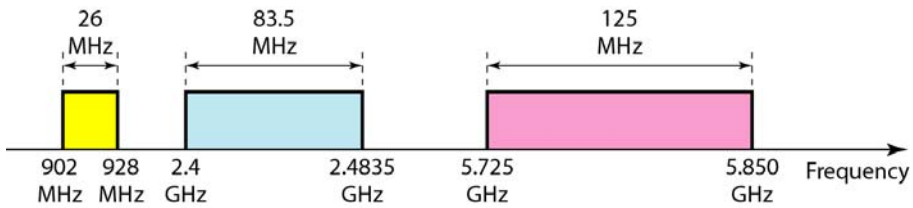

Industrial, scientific, and medical (ISM) band

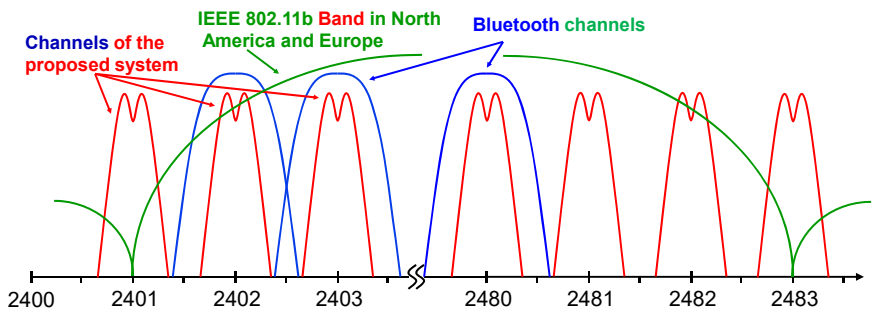

Introduction: Communication links and Telecommunications

Communication links:

1- Simplex: data can travel in one direction only.

2- Half Duplex (HD): data can travel in both directions, but not at the same time (not simultaneously).

3- Full Duplex (FD): data can travel in both directions at the same time (simultaneously).

Telecommunication:

1- telecommunication over fixed lines is called point-to-point communication because it is between one transmitter and one receiver.

2- telecommunication through broadcasts, e.g. radio or television station, is called broadcast communication because it is between one powerful transmitter (generally is Complex) and numerous low-power but sensitive receivers.

Introduction: Transmitter architecture

Communication link:

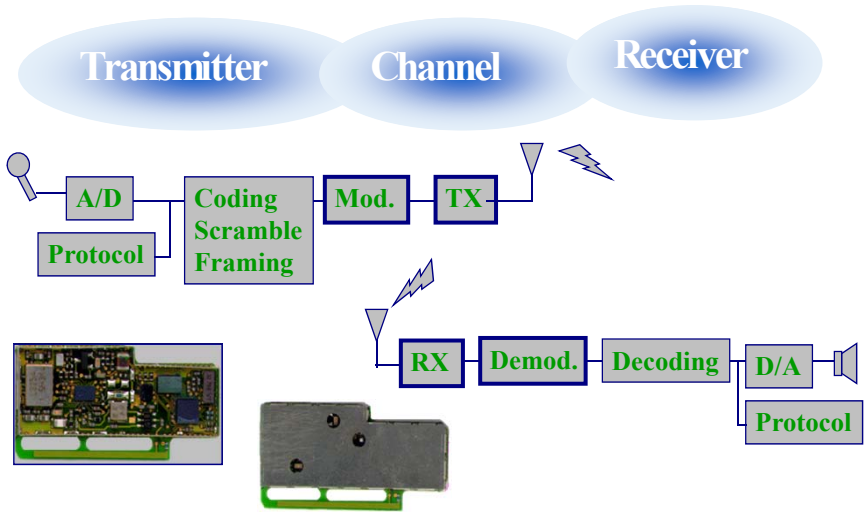

Introduction: Transmitter architecture

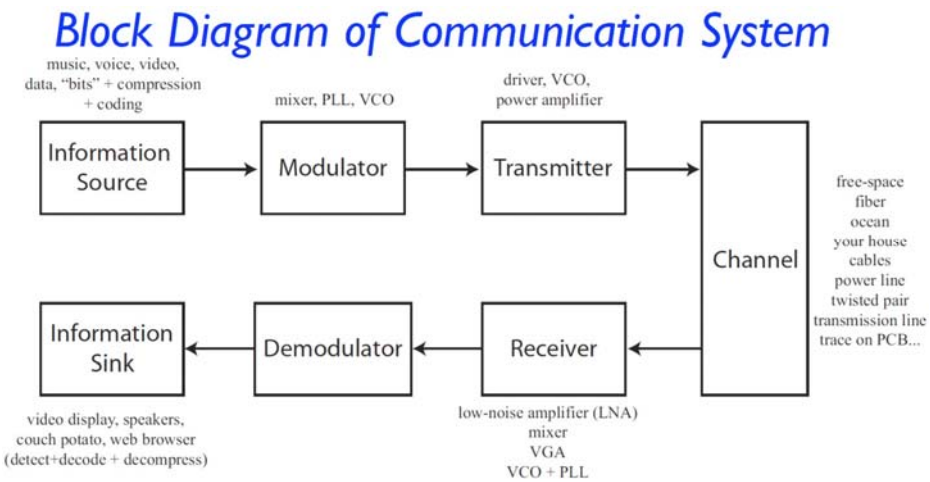

Introduction: Transmitter architecture

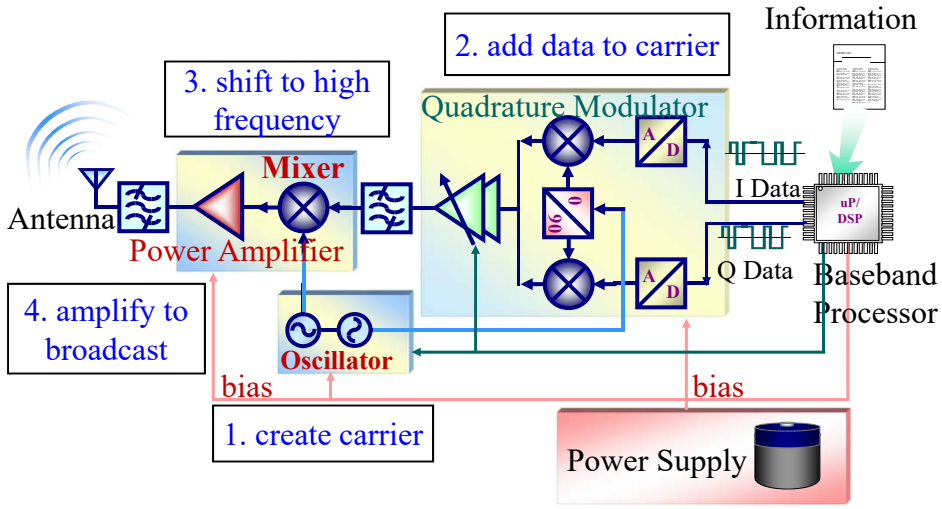

more times Power Amplifier need for driver (Preamplifier).

Introduction: Role of the Transmitter

- The transmitter modulates the baseband information onto an IF carrier, mixes with RF oscillator, amplifies the waveform and delivers it to the transmitting antenna.
- As shown in the block diagram, IF oscillator modulate the baseband signal and RF oscillator is mixed with the modulated signal; then it is amplified to a desired power level by the power amplifier.
- Transmitter key performance parameters: Output power, efficiency, unwanted radiation/emission

Modulators are classified

» Analog (AM, FM, and PM); Specification: SNR (Signal to Noise Ratio).

» Digital (ASK, FSK, and PSK); Specification: BER (Bit Error Rate).

Introduction: Receiver architecture

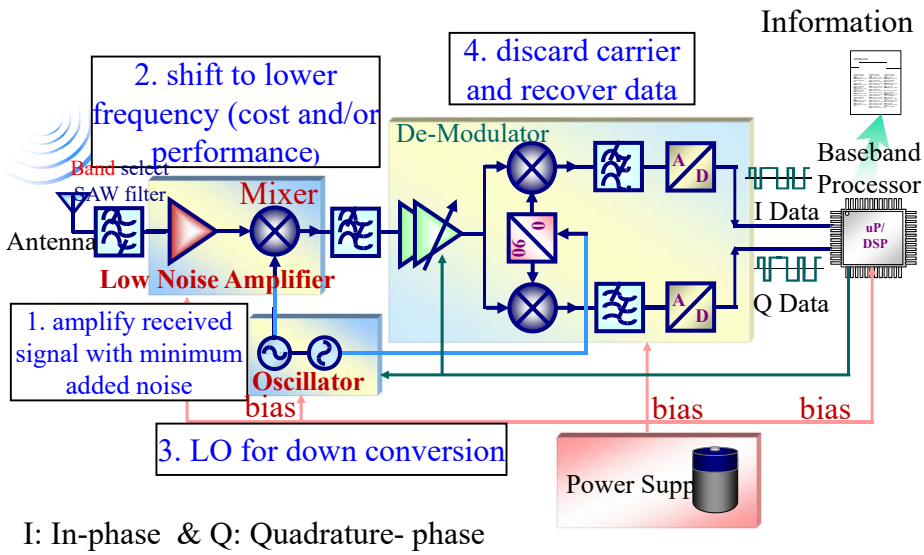

I: In-phase & Q: Quadrature- phase

Introduction: Role of the Receiver

- The purpose of a receiver is to recover the original information from the received signal.
- Since many different signals present simultaneously at the input of receiver, therefore it is important to select the desired signal by a band select filter.
- The ability of a receiver to discriminate the desired signal between the different frequencies is called ***receiver selectivity.***
- All receivers have the common problems of selectivity, rejecting the image frequency, input referred noise, and detecting the desired signal.
- Receivers key performance parameters: selectivity, sensitivity, noise figure, linearity, dynamic range, power consumption
- Receivers/transmitter are
  - » Homodyne (direct conversion or zero IF) (and Low IF)
  - » Heterodyne (single conversion; used one IF) / super Heterodyne (double conversion; used two IF)

Introduction: Transceiver architecture

Surface Acoustic Wave Filters or **SAW Filters** are compact, low-cost RF filters that can be used in a wide range of applications up to 3 GHz. SAW filter converts an electrical signal into an acoustic wave and then back to an electrical signal on a piezoelectric material by the input and output interdigital transducers.

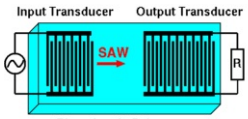

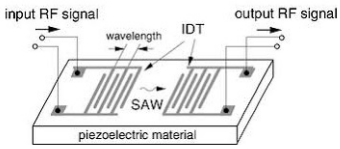

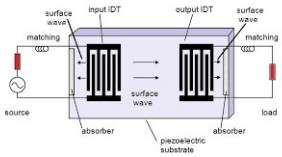

Note: Generally, after the antenna a balun (off-chip) is used to transform the single-ended signal to a differential signal. A balun is a passive structure which converts between balanced and unbalanced electrical signals.

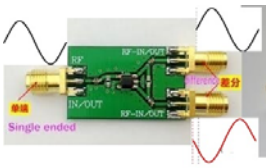

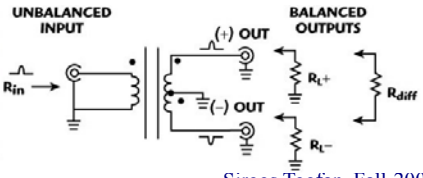

Introduction: Transceiver architecture

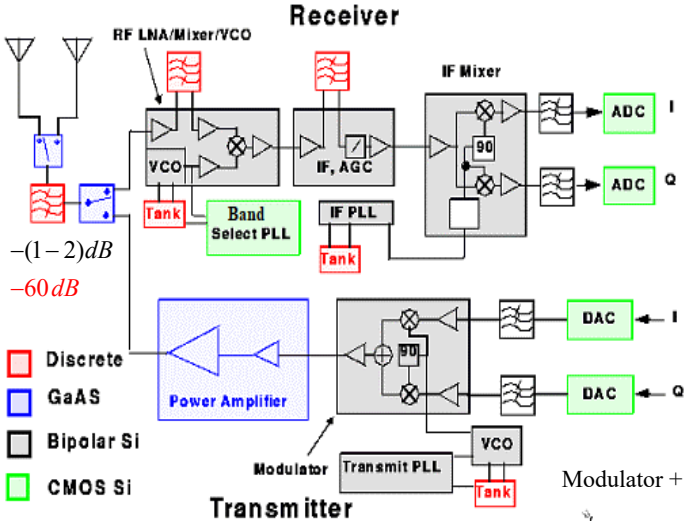

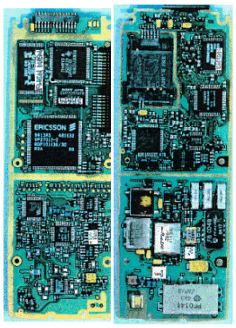

Modulator + Demodulator = Modem

Note: Generally, output is high power and input is high sensitive. Thus, when an antenna is used for transmit and receive (TR), it needs for multiplexing/duplexing to separate their path.

Introduction: Transceiver architecture

In GSM standard the output power is 1Watt.

$$p = \frac{V_o^2}{2R} = \frac{V_o^2}{2 \times 50} \Rightarrow V_o = 10V$$

Question: As know the battery of mobile is 3.6V. So, how they provide the aforementioned voltage?

Introduction: Multiplexing

Multiplexing methods:

1- Frequency Division Multiplexing (FDM): FDM divides the channel into two or more frequency ranges that do not overlap.

FDM used some sharp filters.

2- Time Division Multiplexing (TDM): TDM divides/allocates certain/different time periods/slots to each channel.

TDD used some switches.

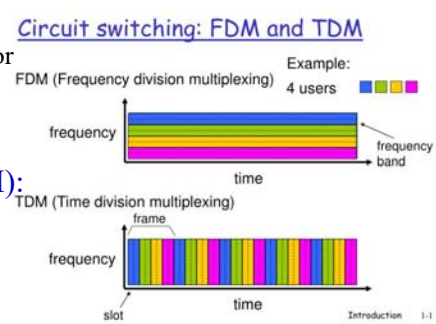

What is cellular capability? What are take-over and hand-off ?

Generally, multicore optical fibers are used as high rate data links.

Code division multiple access (CDMA): This allows several transmitters to send information simultaneously with employs spread-spectrum technology and a special coding scheme over the same physical channel.

Introduction: Duplexing

Duplexing methods (Access Mode):

1- Frequency-Division Duplexing (FDD): FDD is an application of FDM to use separate frequency bands for transmit (uplink) and receive (downlink). FDD used two sharp filter for separating.

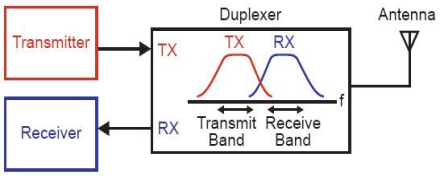

GSM provides 125 channels- 200 kHz

2- Time-Division Duplexing (TDD): TDD is an application of TDM to separate transmit (uplink) and receive (downlink) signals in time domain. TDD used TR (transmit and received) switch.

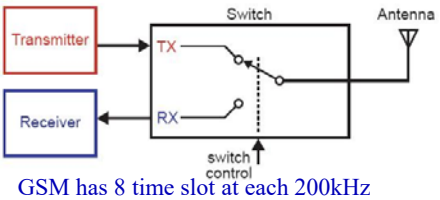

GSM has 8 time slot at each 200kHz

Note: Generally, downlink is kept at lower band and uplink at upper band. e.g. GSM-900 uses 890 - 915 MHz to send information from the Mobile Station (MS) to the Base Transceiver Station, BTS, (uplink) and 935 - 960 MHz for the other direction (downlink). All BTSs are controlled by Mobile Telephone Switching Office (MTSO).

Introduction: Digital Communication System

Block Diagram of Digital Communication Systems

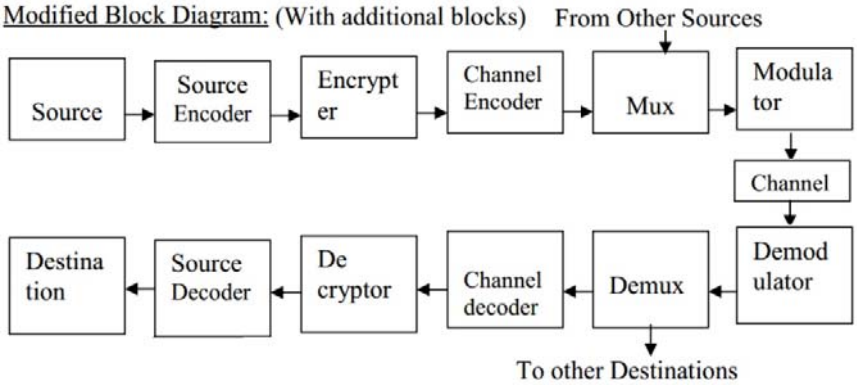

There is a tradeoff between the bandwidth, baud rate and Power

Introduction: Digital Communication System

Another Block Diagram of Digital Communication Systems

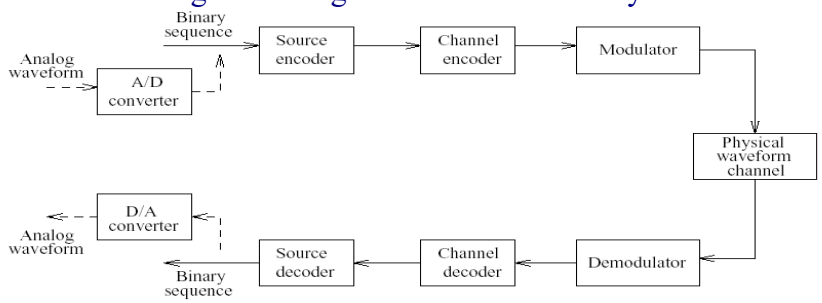

Digital modulation: Phase shift keying (PSK), Binary Phase Shift Keying (BPSK), Quadrature Phase Shift Keying (QPSK), Offset Quadrature Phase Shift Keying (OQPSK), Frequency shift keying (FSK), Minimum Shift Keying (MSK), Gaussian Minimum Shift Keying(GMSK), Amplitude shift keying (ASK), Continuous phase modulation (CPM), Differential PSK (DPSK), Quadrature Amplitude Modulation (QAM), On-off keying (OOK).

Homework: Plot the block diagram each of aforementioned modulations in detail.

Introduction: Digital Modulator

Base band Modulator:

$$\text{Digital Modulation}: \begin{cases} \text{Amplitude Shift Keying (ASK)} \\ \text{Binary Phase Shift Keying (BPSK)} \\ \text{Quadrature Phase Shift Keying (QPSK)} \\ \text{Frequency Shift Keying (FSK)} \end{cases}$$

$$\text{ASK}: I \times \cos(\omega_c t) \quad \text{where } I = 0, 1$$

$$\text{BPSK}: I \times \cos(\omega_c t) \quad \text{where } I = 1, -1$$

$$\text{QPSK}: I \times \cos(\omega_c t) + Q \times \sin(\omega_c t) \quad \text{or in complex mode} \quad r = I + jQ$$

$$(I, Q) = (1,1); (1,-1); (-1,1); (-1,-1) \Rightarrow I \times \cos(\omega_c t) + Q \times \sin(\omega_c t)$$

$$= \begin{cases} \cos(\omega_c t) + \sin(\omega_c t) & \text{or} \quad \cos(\omega_c t) - \sin(\omega_c t) \\ -\cos(\omega_c t) + \sin(\omega_c t) & \text{or} \quad -\cos(\omega_c t) - \sin(\omega_c t) \end{cases}$$

FSK implemented by Voltage Controlled Oscillator (VCO)

Introduction: Digital Cellular and Cordless Phone Standards

Standard	Multiple Access	Receive Frequency (MHz)	Transmit Frequency (MHz)	Channel Spacing (kHz)	Mod. Scheme	Region
DAMPS (IS-54)	TDMA/FDMA	869-894	824-849	30	☐/4 DQPSK	USA
GSM	TDMA/FDMA	935-960	890-915	200	GMSK	Europe
CDMA (IS-95)	CDMA/FDMA	869-894	824-849	1250	BPSK/QPSK	USA
JDC	TDMA/FDMA	940-956 1447-1489 1501-1513	810-826 1429-1441 1453-1465	25	☐/4 QPSK	Japan
W-CDMA	CDMA	Emerging		40,000	M-PSK	USA
ISM	TDMA/CDMA/ FDMA	902-928	902-928	10,000	BPSK	USA
DCS-1800	TDMA/FDMA	1895-1907	1710-1785	200	GFSK	UK
CT2	FDMA	864-868	864-868	100	GFSK	Europe Asia
DECT	TDMA/FDMA	1800-1900	1800-1900	1728	GFSK	Europe
PHS	TDMA/FDMA	1895-1907	1895-1907	300	☐/4 DQPSK	Japan

Introduction: GSM/EDEGE Cellular Phone

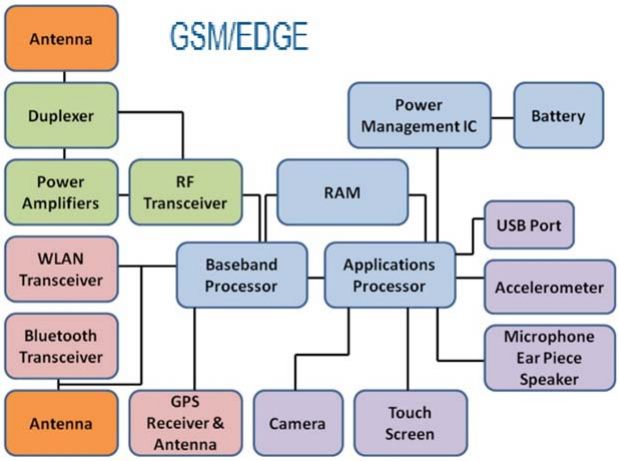

A typical phone layout consists of many components that make wireless communication possible.

There are others standards such as ZigBee, Wireless LAN(IEEE 802.11a,b,…), 4G, 5G.

Introduction: supper-heterodyne Receiver

Why supper-heterodyne Receiver

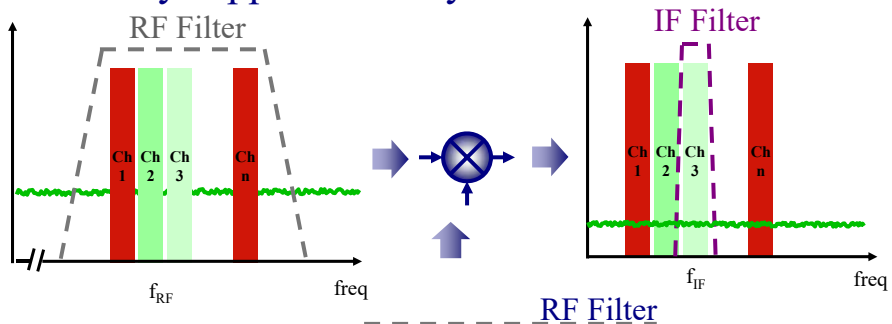

Used for:

1-To decreasing the flicker noise

2- Quality factor of filters are finite.

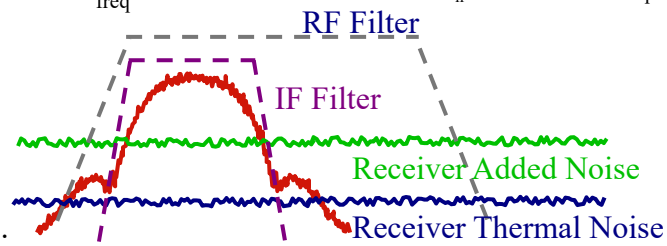

Introduction: Intermediate frequency selection

Depending on which parameters the intermediate frequency (IF) is selected:

1- Requirement SOW filters availability in the market

2- Does not be any powerful transmitter around the image frequency

3- having the Suitable sensitivity and selectivity; As the IF increases, the sensitivity of receiver is improved (Image rejected easily before Mixing) and its channel selectivity gets harder (required to high Q), and vice versa. This problem relieves with super heterodyne structure.

Note: heterodyne (single IF) or super heterodyne (dual IF) receiver needs for 3 SOW (off chip) filters (Band select, Image rejection and IF filter). This factor has made these receivers less used today.

Introduction: Mixer

- Operating of the mixer is based on these equations

$$\sin\omega_C t \sin\omega_L t = \frac{1}{2}[\cos(\omega_C - \omega_L)t - \cos(\omega_C + \omega_L)t]$$

$$\cos\omega_C t \cos\omega_L t = \frac{1}{2}[\cos(\omega_C - \omega_L)t + \cos(\omega_C + \omega_L)t]$$

$$\sin\omega_C t \cos\omega_L t = \frac{1}{2}[\sin(\omega_C - \omega_L)t + \sin(\omega_C + \omega_L)t]$$

$$\cos\omega_C t \sin\omega_L t = \frac{1}{2}[\sin(\omega_C - \omega_L)t - \sin(\omega_C + \omega_L)t]$$

- Selected frequency in up conversion mixer: $(\omega_C + \omega_L)$
- Selected frequency in down conversion mixer : $(\omega_C - \omega_L)$

Question 1: What is the image frequency? How is it reject?

Question 2: How we can used the image rejection filter in the receiver?

Introduction: Image Rejection Filter

Image Rejection Filter: Since the image and the signal lie on the two sides of the LO frequency, it is possible to architect the RX so that it can distinguish between the two and reject one. Generally, it is implemented with SOW filters.

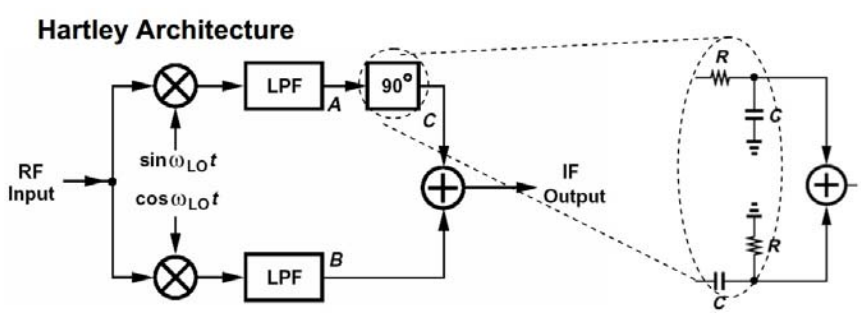

Also we can used the zero IF (Direct conversion/ Homodyne) receivers to image frequency rejection. But it suffer from the DC output.

Introduction: Image Rejection Filter

Image Rejection Filter:

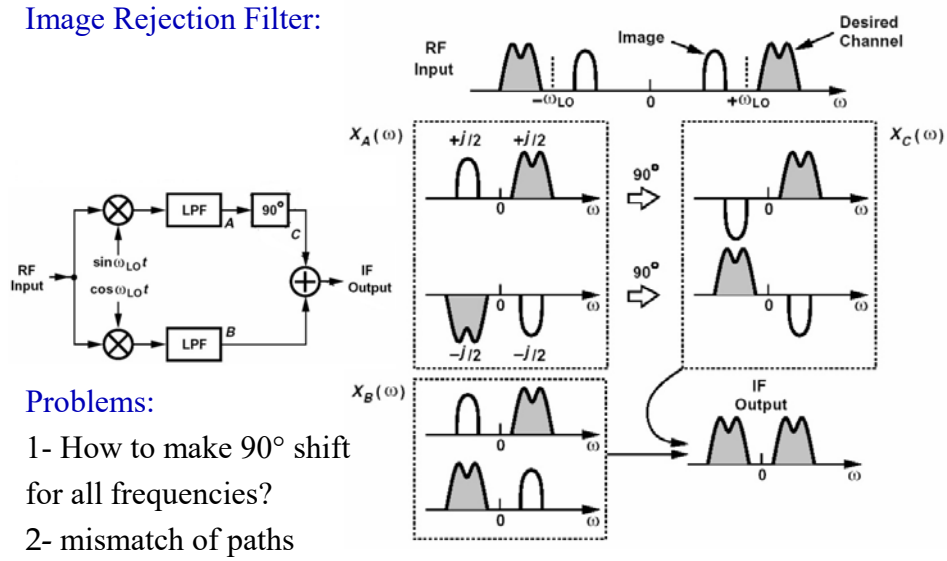

Problems:

1- How to make 90° shift for all frequencies?

2- mismatch of paths

Introduction: Image Rejection Filter

Image Rejection Filter:

$$X_{in} = A_{rf} Cos\omega_{rf} t + A_{im} Cos\omega_{im} t$$

$$\Rightarrow X_{in,A} = Sin\,\omega_{Lo} t[A_{rf} Cos\omega_{rf} t + A_{im} Cos\omega_{im} t]$$

$$\Rightarrow X_{in,B} = Cos\,\omega_{Lo} t[A_{rf} Cos\omega_{rf} t + A_{im} Cos\omega_{im} t]$$

$$\Rightarrow X_{in,B} = A_{rf} Cos\omega_{rf} t\, Cos\,\omega_{Lo} t + A_{im} Cos\omega_{im} t\, Cos\,\omega_{Lo} t$$

$$\Rightarrow X_{in,B} = 0.5 A_{rf}[Cos(\omega_{rf} + \omega_{Lo})t + Cos(\omega_{rf} - \omega_{Lo})t]$$

$$+ 0.5 A_{im}[Cos(\omega_{im} + \omega_{Lo})t + Cos(\omega_{Lo} - \omega_{im})t]$$

$$\Rightarrow X_B = 0.5 A_{LP}[A_{rf} Cos(\omega_{rf} - \omega_{Lo})t + A_{im} Cos(\omega_{Lo} - \omega_{im})t]$$

$$Also \Rightarrow X_A = 0.5 A_{LP}[A_{rf} Sin(\omega_{rf} - \omega_{Lo})t - A_{im} Sin(\omega_{Lo} - \omega_{im})t]$$

$$\Rightarrow X_C = 0.5 A_{LP}[A_{rf} Sin(\pi/2 + \omega_{rf} - \omega_{Lo})t - A_{im} Sin(\pi/2 + \omega_{Lo} - \omega_{im})t]$$

$$\Rightarrow X_C = 0.5 A_{LP}[A_{rf} Cos(\omega_{rf} - \omega_{Lo})t - A_{im} Cos(\omega_{Lo} - \omega_{im})t]$$

$$IF = X_B + X_C = A_{LP} A_{rf} Cos(\omega_{rf} - \omega_{Lo})t = A_{LP} A_{rf} Cos\,\omega_{If} t$$

Introduction: Image Rejection Filter

Generally, in the receivers, the image rejection filters are placed before the mixer and the intermediate frequency filters are placed after the mixer. Image rejection can perform in the digital domain.

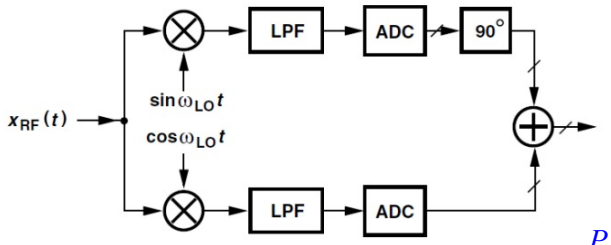

Question: what is Image Rejection Ratio? $IRR = \frac{P_{im,out}}{P_{if}}$

Another image rejection filter presented by Weaver.

Homework: Draw the block diagram of Weaver image rejection filter and write its equations.

Introduction: Dynamic Range and Power Gain

- dynamic range: The dynamic range of a radio receiver is the range of signal levels which it can operate (be able to pick up the signal). Its low end is governed by its sensitivity (or (noise +SNR)dB); whilst its high end is governed by its overload or strong signal handling performance. (dependent to the Modem type)
  - » Noise (small signal): noise determines the threshold for the minimum detectable signal level. Generally, noise is measured at the input of the system and it is presented whit "noise figure or noise- equivalent temperature".
  - » Distortion (Large signal): distortion determines the threshold for the maximum detectable signal level. It is presented by some parameters such as Harmonic Distortion, Gain Compression, Intermodulation, AM-AM, AM-PM
- available power gain: Ratio of "the power that the Circuit would deliver to a matched load " to "the power that the Source would deliver to a matched Circuit"

$$G_a = \frac{(A_v v_i \frac{R_L}{R_L + R_o})^2 / R_L}{\frac{v_i^2}{R_{in}} = (v_s \frac{R_{in}}{R_s + R_{in}})^2 / R_{in}} \overset{\substack{If\ R_L = R_o \\ \&\ R_s = R_{in}}}{=} A_v^2 \frac{R_{in}}{4R_L}$$

General Considerations: Units in RF Design

A dB is defined as a POWER ratio. For example the reflection factor is defined as follow:

$$\Gamma_{dB} = 10\log\left(\frac{P_{rev}}{P_{for}}\right) = 10\log\left(|\Gamma|^2\right) = 20\log\left(|\Gamma|\right)$$

A dBm value or dBW value represents an actual power, whereas a dB value represents a ratio of power, such as the power gain.

The absolute signal level are often expressed in dBm (sometimes dBmW or Decibel-milliwatts) rather than in Watts or Volts. the power ratio in dbm is expressed by:

$$P_{Signal}\Big|_{dBm} = 10\,Log\left(\frac{P_{Signal}}{1mW}\right) = 30 + 10\,Log\left(\frac{P_{Signal}}{1W}\right)$$

$$1mW \equiv 0\,dbm \quad , \quad 10mW \equiv 10\,dbm \quad , \quad 100mW \equiv 20\,dbm$$

$$1W \equiv 30\,dbm \quad , \quad 10W \equiv 40\,dbm \quad , \quad 1kW \equiv 60\,dbm$$

General Considerations: Units in RF Design

$$A_V|_{\text{dB}} = 20\log\frac{V_{out}}{V_{in}}$$

$$A_P|_{\text{dB}} = 10\log\frac{P_{out}}{P_{in}}.$$

$$A_P|_{\text{dB}} = 10\log\frac{\frac{V_{out}^2}{R_0}}{\frac{V_{in}^2}{R_0}} = 20\log\frac{V_{out}}{V_{in}} = A_V|_{\text{dB}},$$

This relationship between Power and Voltage only holds when the *input and output impedance are equal*

$$P_{sig}|_{\text{dBm}} = 10\log\left(\frac{P_{sig}}{1\text{ mW}}\right)$$

$$-1dB = 10Log0.1$$

An amplifier senses a sinusoidal signal and delivers a power of 0 dBm to a load resistance of 50 Ω. Determine the peak-to-peak voltage swing across the load.

Solution:

$$\frac{V_{pp}^2}{8R_L} = 1\text{ mW}$$

where R_L= 50 Ω thus,

$$V_{pp} = 632\text{ mV}$$

General Considerations: Units in RF Design

- **If an amplifier senses a sinusoidal signal and delivers a the following powers to a load resistance of 50 Ω. Determine the peak-to-peak voltages swing across the load.**

$$0.01mW \equiv -20\,dbm \Rightarrow \frac{V_{pp}^2}{8R_L} = 0.01mW \Rightarrow V_{pp} = 63.2mV$$

$$0.1mW \equiv -10\,dbm \Rightarrow \frac{V_{pp}^2}{8R_L} = 0.1mW \Rightarrow V_{pp} = 200mV$$

$$10mW \equiv 10\,dbm \Rightarrow \frac{V_{pp}^2}{8R_L} = 10mW \Rightarrow V_{pp} = 2V$$

$$100mW \equiv 20\,dbm \Rightarrow \frac{V_{pp}^2}{8R_L} = 100mW \Rightarrow V_{pp} = 6.32V$$

$$1W \equiv 30\,dbm \Rightarrow \frac{V_{pp}^2}{8R_L} = 1W \Rightarrow V_{pp} = 20V$$

Introduction: Transistor nonlinearity

This figure shows a basic transistor amplifier in which it might be constructed in integrated form. The lower- two transistors provide a constant current bias source for transistor Q_1.

This amplifier operate approximately as a wideband amplifier. One way to expand its broadband is adding an un-bypassed resistor on the emitter of Q_1.

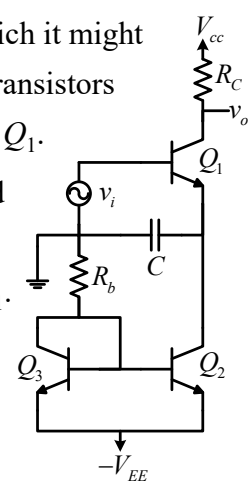

in this figure:

$$I_{E1} = I_{C2} = \alpha I_{E2} \simeq \alpha \frac{V_{EE} - 0.7}{R_b}$$

For zero input signal:

$$v_i = 0 \Rightarrow V_{BE,Q1} = \eta V_T Ln \frac{I_{C2}}{I_{ES}} = \eta V_T Ln \frac{I_{E1}}{I_{ES}} \triangleq V_{dc}$$

Introduction: Transistor nonlinearity

Where the input signal is not zero, the current of Q_1 obtains as follow:

$$I_{e1} = I_{ES} e^{\frac{V_{dc}+v_i}{\eta V_T}} = I_{ES} e^{\frac{V_{dc}}{\eta V_T}} e^{\frac{v_i}{\eta V_T}} = I_{E1} e^{\frac{v_i}{\eta V_T}}$$

For a sinusoidal input signal:

$$v_i = V_m Cos\omega t \triangleq x\eta V_T Cos\omega t \Rightarrow I_{e1} = I_{E1} e^{x Cos\omega t}$$

From a known Fourier series expansion:

$$e^{xCos\omega t} = I_o(x) + 2\sum_{1}^{\infty} I_n(x) Cosn\omega t$$

Introduction: Transistor nonlinearity

$$e^{xCos\omega t} = I_o(x) + 2\sum_{1}^{\infty} I_n(x) Cosn\omega t$$

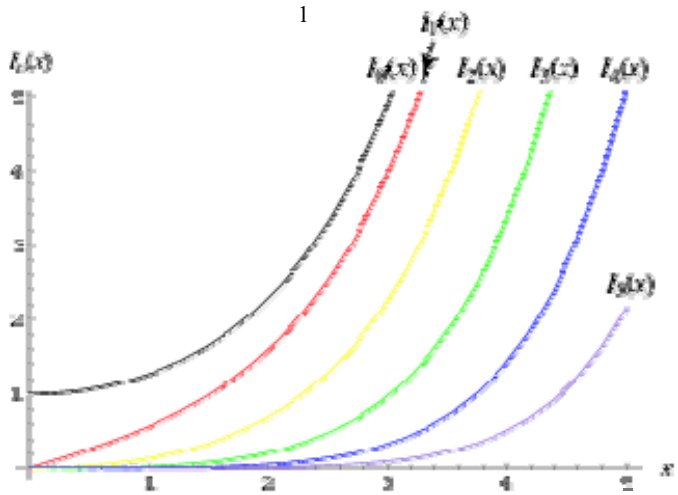

Introduction: Transistor nonlinearity

Therefore, transistor is a nonlinear element. But it is ≈time invariant in this course. It is time variant against the pulse signals.

Where the $I_n(x)$ is a modified first kind Bessel functions, order n and argument x.

$$I_{e1} = I_{E1}[I_o(x) + 2\sum_{1}^{\infty} I_n(x)\,\mathrm{Cos}\,n\omega t]$$

$$\Rightarrow I_{c1} = \alpha I_{E1} I_o(x)[1 + 2\sum_{1}^{\infty} \frac{I_n(x)}{I_o(x)}\mathrm{Cos}\,n\omega t]$$

All of modified Bessel functions are monolithic and positive for $n \geq 0$ and $x \geq 0$. For $x=0$, $I_n(x)$ is unity and for other $x>0$, $I_n(x)>1$. Also for small values of x, these modified Bessel functions obtain as follow:

$$If\ x \to 0 \Rightarrow I_n(x) = \frac{(x/2)^n}{n!}$$

Introduction: Transistor nonlinearity

From equation I_{c1}, it is apparent, the average value of I_{c1} is given by

$$I_{C1} = \alpha I_{E1} I_o(x)$$

However, the biasing circuitry demands that $I_{C1} = \alpha I_{E1} = \alpha I_{C2}$; hence it average current will be as two series current sources.

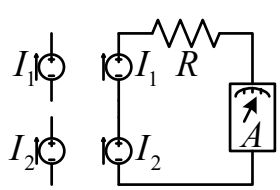

$$A = \min[I_1, I_2]$$

Since equivalent current of two series current sources is the minimum of them. Therefore, $I_{C1} = \min[\alpha I_{E1}, \alpha I_{E1} I_o(x)] = \alpha I_{E1}$

Introduction: Transistor nonlinearity

Therefore the input signal changes the Base-Emitter bias voltage and make AC current. The DC & AC voltages and currents obtain by

$$\begin{cases} I_{c1} = \alpha I_{E1}[1 + 2\sum_{1}^{\infty} \frac{I_n(x)}{I_o(x)} \mathrm{Cos}\, n\omega t] \\ I_{C1} = \alpha I_{E1} = \alpha I_{C2}\ ,\ \ i_{c1} = 2\alpha I_{E1} \sum_{1}^{\infty} \frac{I_n(x)}{I_o(x)} \mathrm{Cos}\, n\omega t \\ V_{be} = V_{dc,BE} + v_i Cos\omega t \\ V_{dc,BE} = V_{dc} - \eta V_T Ln\, I_o(x) = \eta V_T Ln \frac{I_{E1}}{I_{ES} I_o(x)} \end{cases}$$

Question: What is the maximum value of $[I_n(x)/I_o(x)]$?

Introduction: Transistor nonlinearity

Fourier series expansion of some equations:

$$e^{x Cos\omega t} = I_o(x) + 2\sum_{1}^{\infty} I_n(x) Cosn\omega t$$

$$e^{-x Cos\omega t} = I_o(x) + 2\sum_{1}^{\infty} (-1)^n I_n(x) Cosn\omega t$$

$$e^{x \mathrm{Sin}\, \omega t} = e^{x \mathrm{Cos}(\omega t - \pi/2)} = I_o(x) + 2\sum_{1}^{\infty} I_n(x) Cosn(\omega t - \pi/2)$$

$$e^{-x \mathrm{Sin}\, \omega t} = I_o(x) + 2\sum_{1}^{\infty} (-1)^n I_n(x) Cosn(\omega t - \pi/2)$$

Introduction: Transceiver Architecture
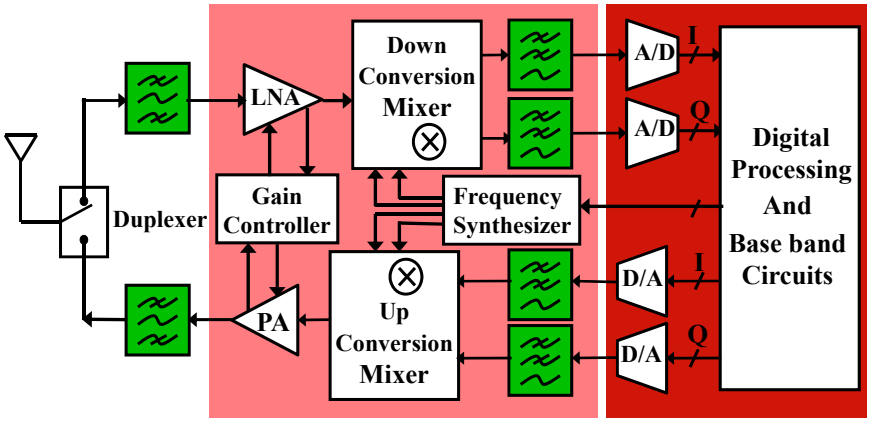
In total we can introduce a brief structure for a transceiver as follow